1870734
Queen Louvered AN Bed

Parts and Hardware List

A.	Headboard	1 pc
B.	Footboard	1 pc
C.	Side Rails	2 pcs
D.	Support Slats	12 pcs
E.	Philips Head Screws	24 pcs
F.	Philips Head Screwdriver	1 pc

∗ Please make sure that you have all the parts and hardware indicated above before you begin assembly of this item.
∗ This item should be assembled on a soft surface to prevent scratching the finish during assembly.
∗ This item may require periodic tightening.

Hardware Illustrations

E. Philips Head Screw

Assemble Bed

Parts required

A.	Headboard	1 pc	D.	Support Slats	12 pcs
B.	Footboard	1 pc	E.	Philips Head Screws	24 pcs
C.	Side Rails	2 pcs	F.	Philips Head Screwdriver	1 pc

1. **Attach Side Rails (C)** Insert the exposed hooks at the end of Side Rails (C) into the pre-bored slots of the Headboard (A) and Footboard (B). Press the Side Rails (C) down onto the pins in Headboard (A) and Footboard (B) and ensure that the hooks are all the way down on the pins. See Illustration
2. **Attach Support Slats (D)** Align the pre-drilled holes in the Support Slats (D) with the pre-drilled holes in the Side Rails (C). Secure both ends of each Support Slat (D) with Philips Head Screws (E) using the Philips Head Screwdriver (F). See Illustration

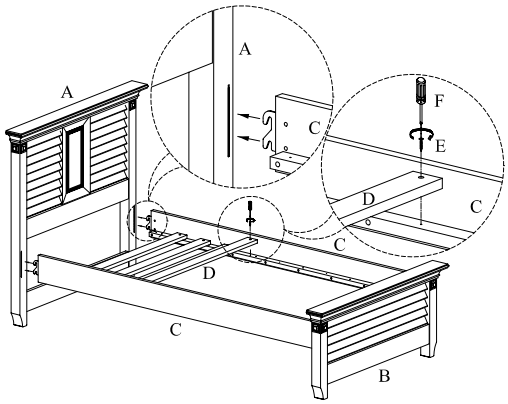

Illustration

R1-3-7-03